498 B

8/14/84 EW

BUILDING STRENGTH WITH STEEL

BOCK

August 8, 1984

Administrator
National Highway Traffic Safety Administratior
400 Seventh Street, S.W.
Washington, DC 20590

ORIGINAL

1704

4pgs

Gentlemen: 01-22-N11B-

This letter is to inform you of our intent to begin manufacturing trailers of the "open-body" type with Gross Vehicle Weight Ratings from 500 lbs. to 25,000 lbs. with intended uses ranging from light utility to medium-heavy equiptment hauling.

Our corporate name and address is: Bock Industries of Fla., Inc.
4920 Eisenhower Blvd.
Tampa, Fl. 33614

Our SAE assigned WMI number is: 1 B 9 094

A copy of this letter along with our proposed VIN code work-sheet are being sent to the VIN Coordinator.

Sincerely,

Dennis J. Kennedy

Dennis J. Kennedy
General Manager

RECEIVED
NHTSA DOCKET
84 NOV 29 AM 11:43

BOCK INDUSTRIES, INC.
4920 EISENHOWER BLVD. / TAMPA, FLORIDA 33614 / PH. 813-884-2211

1

SAE ASSIGNED			TRAILER TYPE	BODY TYPE	LENGTH		NO. AXLES	CHECK DIGIT	MODEL YEAR	PLANT	SAE ASSIGNED			PRODUCTION SEQUENCE			
1	B	9								T	0	9	4				— VIN
1	2	9						0		3	0	9	4				— VALUE
X 8	7	6	5	4	3	2	10	0	9	8	7	6	5	4	3	2	— FACTOR

8 + 14 + 54 + ___ + ___ + ___ + ___ + ___ + 0 + ___ + 24 + 0 + 54 + 20 + ___ + ___ + ___ = ___

÷ 11

TRAILER TYPE

Fifth Wheel - F

Tagalong - T

BODY TYPE

Auto - A

Equipment - E

Flatbed - F

Special - S

Utility - U

LENGTH

Actual Length to Nearest Foot as Follows:

Fifth Wheel - Over All Length

Tagalong - Bed Length

CHECK DIGIT

.09 = 1
.18 = 2
.27 = 3
.36 = 4
.45 = 5
.54 = 6
.63 = 7
.72 = 8
.81 = 9
.90 = X
.00 = 0

NUMBER AXLES

Actual Number of Axles

MODEL YEAR

Callendar Year of Manufacture Per MVSS 115 Table II

1984 - E	1989 - K
1985 - F	1990 - L
1986 - G	1991 - M
1987 - H	1992 - N
1988 - J	1993 - P

PLANT

Tampa, Florida - T

BOCK INDUSTRIES OF FL., INC.

SAE ASSIGNED			TRAILER TYPE	BODY TYPE	LENGTH		NO. AXLES	CHECK DIGIT	MODEL YEAR	PLANT	SAE ASSIGNED			PRODUCTION SEQUENCE			
1	B	9	T	F	2	0	2	0	E	T	0	9	4	0	0	1	— VIN
1	2	9	3	6	2	0	2	0	5	3	0	9	4	0	0	1	— VALUE
X 8	7	6	5	4	3	2	10	0	9	8	7	6	5	4	3	2	— FACTOR

8 + 14 + 54 + 15 + 24 + 6 + 0 + 20 + 0 + 45 + 24 + 0 + 54 + 20 + 0 + 0 + 2 = 286 ÷ 11

26 | .00

CHECK DIGIT

.09 = 1
.18 = 2
.27 = 3
.36 = 4
.45 = 5
.54 = 6
.63 = 7
.72 = 8
.81 = 9
.90 = X
.00 = 0

TRAILER TYPE

Fifth Wheel - F

Tagalong - T

BODY TYPE

Auto - A

Equipment - E

Flatbed - F

Special - S

Utility - U

LENGTH

Actual Length to Nearest Foot as Follows:

Fifth Wheel - Over All Length

Tagalong - Bed Length - 20

NUMBER AXLES

Actual Number of Axles - 2

MODEL YEAR

Callendar Year of Manufacture Per MVSS 115 Table II

1984 - E	1989 - K
1985 - F	1990 - L
1986 - G	1991 - M
1987 - H	1992 - N
1988 - J	1993 - P

PLANT

Tampa, Florida - T

EXAMPLE: 20'0" TANDEM AXLE FLATBED TAGALONG

SEE ATTACHED DRAWING

BOCK INDUSTRIES OF FL., INC.

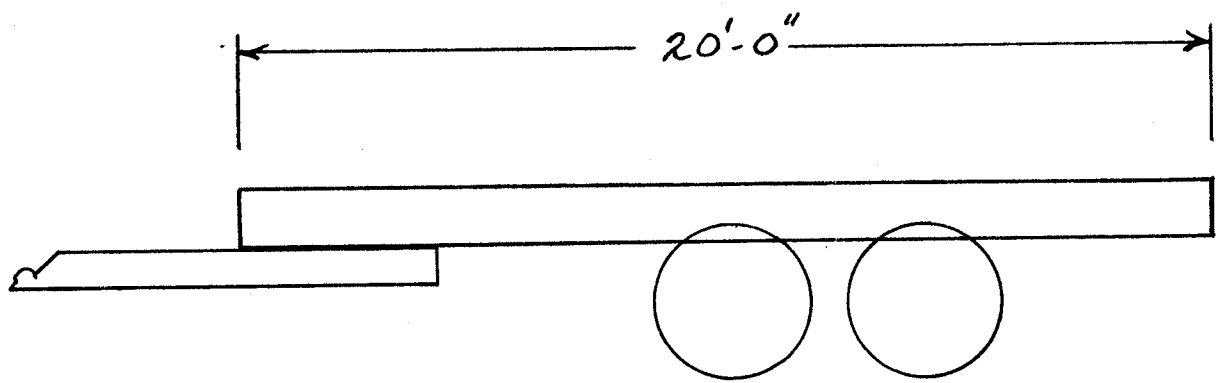

EXAMPLE: 20'-0" TANDEM AXLE FLATBED TAGALONG

MFG. DATE - 10/84

SEE ATTACHED VIN WORKSHEET

BOCK INDUSTRIES OF FL., INC.